# LK-013 Manual V1.04

## Product Features

1.CPU process control, count scores accurately.
2.Prevent pulling out tickets.
3.Prevent motor idling.
4.Easier to clean up the blocked tickets.
5.The wire part is made by SMT technology,quality and stability.
6.Adopt high quality and high-speed motor,continuously dispense tickets without pause.

## Instructions for use

1.According to the need of machine's motherboard, switch the output to NC or NO, switch the input to High level or Low level.
2.Put the tickets into the guide slot, the ticket dispenser will start to install tickets automatically. (or hold down the "manual" key to install the tickets manually).
3.The ticket dispenser can be used after connecting the power and signal wires.

## Performance parameter

| | | |
|---|---|---|
| Operating voltage | | DC 12V±10% |
| Operating current | | <50mA |
| Load current | | ≤1.2A |
| Output mode | | OC |
| Output Signal | | 30ms, <650mA |
| Low level input trigger TTL | | 0~0.5V |
| High level input trigger TTL | | 4.5~5V① |
| Speed of tickets | | Up to 250mm/s |
| Individual packaging | Meas | 128*104*130mm |
| | Gross weight | 377g |
| Carton packaging | Package | 20PCS/SET |
| | Meas | 530*265*280mm |
| | Gross weight | 8.13KG |

Note ①:The measured high level input trigger can withstand voltage up to 15V.

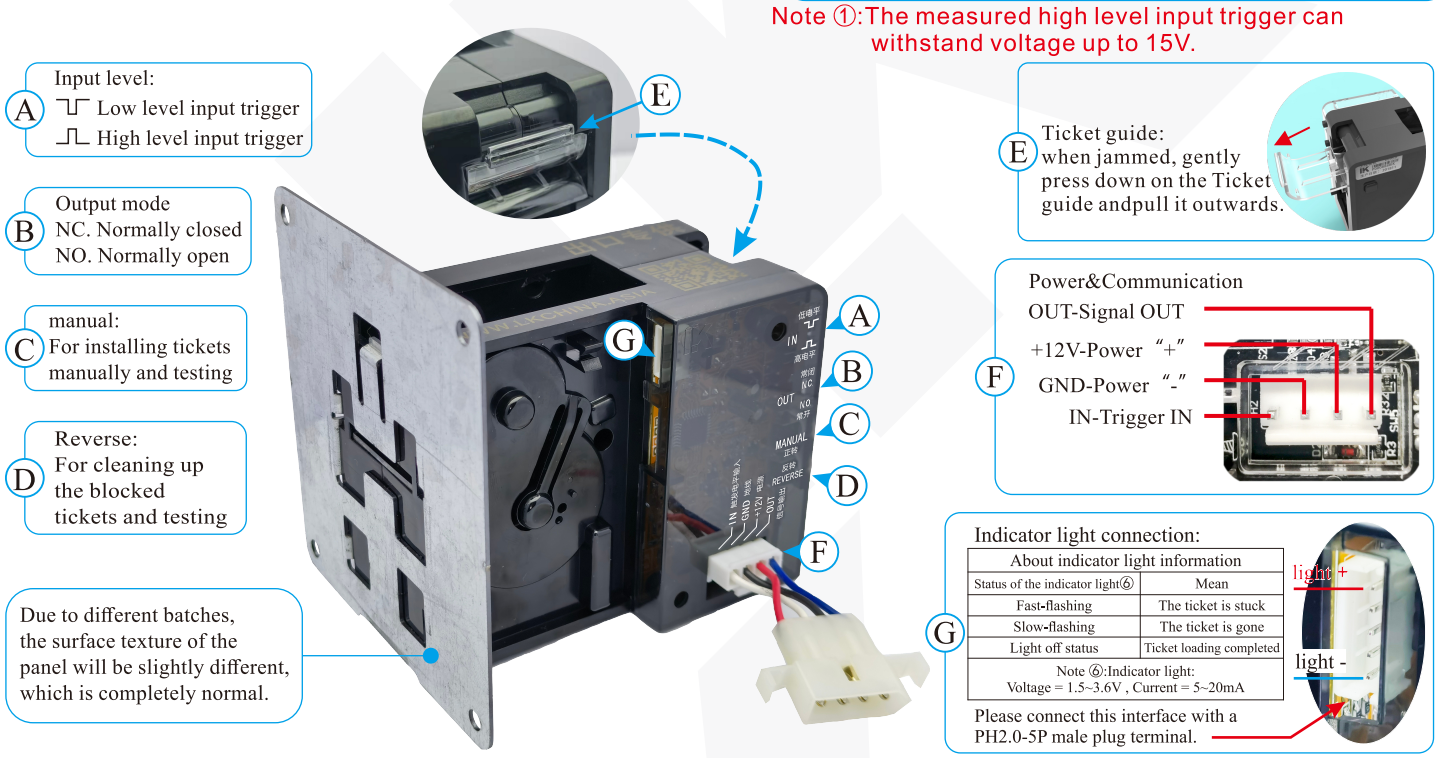


## Communication circuit

Description of interface circuit and communication relationship of ticket outlet:
1.The output signal circuit of the ticket outlet is triode collector or MOS drain open circuit output mode. When it is used,users are advised to use optocouplers to receive signals when designing the interface circuit (see Figure 1).
2.Game machine is Master device, ticket outlet is Slave device.
3.The relationship of the Master inputing control signal, the Slave outputing signal, and motor status is shown in Figure 3. The workflow is shown in Figure 2.

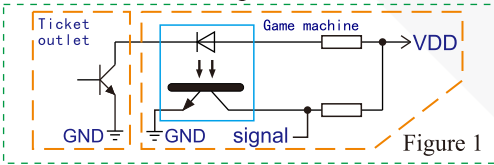

Figure 1

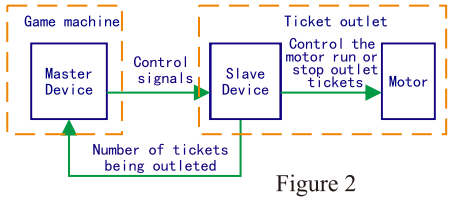

Figure 2

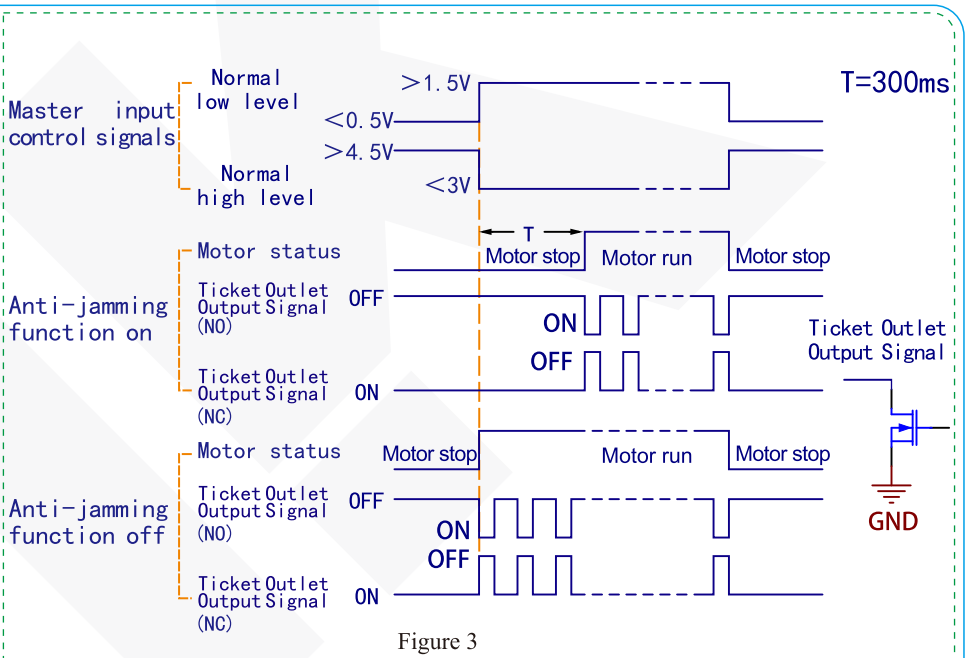

Figure 3

Note②、Note③:Refer to the ELECTRICAL CHARACTERISTICS


Likang Electronic Technology Co.,Ltd.
www.lk.cm

## Assembly dimensions Unit: mm

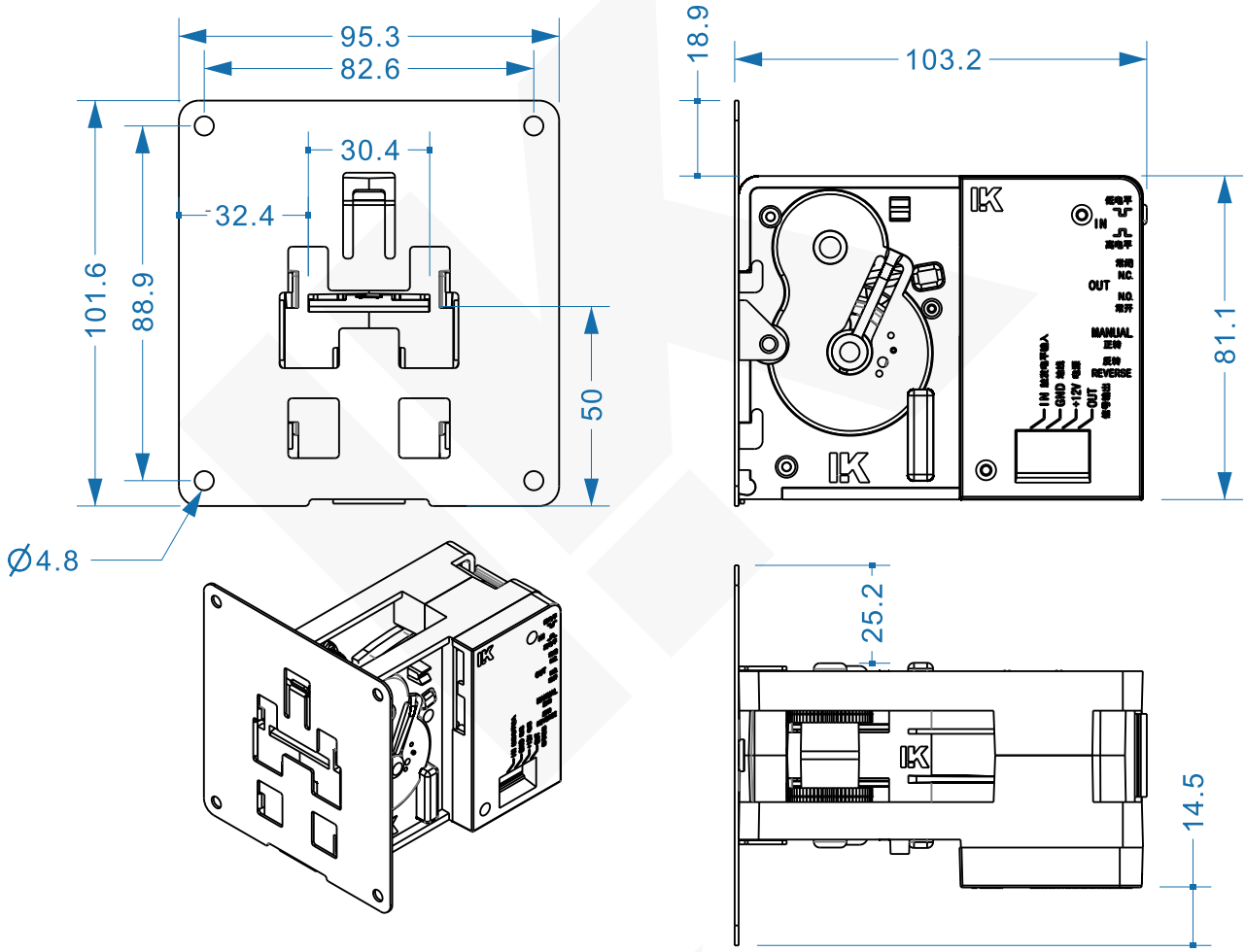


| Symptom | Common Exception Handling |
|---|---|
| The tickets are blocked | Pull out the upper Ticket guide from the ticket machine's back, and clear away the jammings. |
| NO ticket | 1.Check the machine power outlet connect or not,poorly connect or not.<br>2.Check input level is correct or not.<br>3.Check whether something is blocked in the ticket channel.<br>4.Check whether the guide plate is dropped.<br>5.To the check the plug of motor loose or not. |
| Tickets out not matching to the score-ticket ratio | 1.Ground connection(Means "GND") between the machine and the ticket outlet Resistance is not 0Ω. |
| Remain ticket will be automatically outlet after loading | 1. Check whether the input level switch is set correctly.<br>2. If the previous outlet is not completed, the remaining tickets will be automatically finish first after reloading ticket. |
| Fail to install ticket | 1.Check for foreign objects blocking the holes of tickets or not.<br>2.Check whether the circuit voltage is too low or electric eye is bad.<br>3.Insert the ticket into the ticket channel and press the forward key to complete manual ticket loading. |
| No long press on the forward or reverse key | Due to the program is equipped with a protection function, if long press the forward or reverse key for more than 7 seconds, the protection function activates and the motor stops rotating. But it will returns to normal after releasing the key. |
| Dispensing tickets delay | After adding ticket,if there is still points left on the machine, the ticket will outlet after waiting a few seconds. This design is to facilitate the placement of tickets and close the hatch by staff. |
| Noise | There is a slight noise occasionally during the operation of the mechanical structure and the noise will down when dispensing ticket. This phenomenon is normal. |

If product technology improved, it will be edited in the new manual without notice.
The ultimate interpretation of this manual is up to Guangzhou
Likang Electronic Technology Co.,Ltd.

## ELECTRICAL CHARACTERISTICS

| Parameter | Min | Typical | Max |
|---|---|---|---|
| Supply Voltage | 11.0V | 12.0V | 13.0V |
| Standby Current | | 17mA | |
| Motor Start Current | 2.45A | 2.85A | 3.3A |
| Motor Run Current | 0.6A | 0.65A | 0.7A |
| Motor Enable On Voltage | ② 4.5V | 5V | 15V |
| | ③ 0V | 0V | 0.5V |
| Motor Enable On Current | 450uA | | 2mA |
| Motor Enable Off Voltage | ② 0V | 0V | 0.5V |
| | ③ 4.5V | 5V | 15V |
| Motor Enable Off Current | | | 0 |
| Ticket Notch Sink Current | | | 500mA |
| Ticket Notch Voltage pull-up | | | 30V |

## Steps to set the speed mode of the ticket dispense

Long press the reversing button>>>Power on>>>Blue light on>>>Release the reversing button>>>Blue light off>>>Enter the selection mode>>>Short press the reversing button to switch to different modes>>>Observe the status of the blue indicator(Compare to ④ indicating the currently selected mode)>>>Selected mode>>>Short press the forward button to lock the mode and exit the setting (Blue light and yellow light flash once)>>>Setup successful

| ④Status of the blue light | Mode | Time for a ticket⑤ | |
|---|---|---|---|
| | | Pulse time | Response time |
| Off (default) | Fast-speed release | 30ms | 50ms |
| On | Medium-speed release | 50ms | 90ms |
| Flashing | Slow-speed release | 50ms | 300ms |

Note ⑤:This parameter is a theoretical value.The "Pulse time" is fixed, due to the transmission mechanisms such as motors, the "Response time" is usually large.

If product technology improved, it will be edited in the new manual without notice.
The ultimate interpretation of this manual is up to Guangzhou Likang Electronic Technology Co.,Ltd.