LK006F+ Manual V4.1

Product Features

1.CPU process control, count scores accurately.
2.Prevent pulling out tickets.
3.Prevent motor idling.
4.Easier to clean up the blocked tickets.
5.Mantissa memory (When the tickets run out,after putting new tickets the device will restart to work automatically).
6.The wire part is made by SMT technology,quality and stability.
7.Adopt high quality and high-speed motor,continuously dispense tickets without pause.
8.Built-in scale setting program.

A Input level:
Low level input trigger
High level input trigger

B Output mode
NC. Normally closed
NO. Normally open

C manual:
For installing tickets manually and testing

D Reverse:
For cleaning up the blocked tickets and testing

E Mounting holes:



With a square neck screw diameter of 4mm

G Power&Communication
OUT-Signal OUT
+12V-Power "+"
GND-Power "-"
IN-Trigger IN

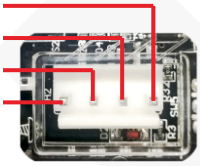

F Ticket guide:
when jammed, gently press down on the Ticket guide andpull it outwards.



4 pin connector wire can be option





Instructions for use

1.According to the need of machine's motherboard, switch the output to NC or NO, switch the input to High level or Low level.
2.Put the tickets into the guide slot, the ticket dispenser will start to install tickets automatically. (Hold down the "manual" key to install the tickets manually).
3.The ticket dispenser can be used after connecting the power and signal wires.
4.The information of the activity indicator light :

- Without ticket.the light in red and blue shift in regular rhythm
- Ticket installed well. In standby status, light shows in blue , purple and red color alternating change
- Ticketing. Light twinkle in blue color.(ticketing in low speed, due to the machine have waiting singal, light twinkle in red once, and then in blue)
- Warning .while the light of the ticket dispenser alternate red as well as blue in quick, indicate electricity is obstructed, or the ticket guide sheet was taken out.

I

The sixth DIP switch is ON stand for score/ticker otherwise is ticket/score

Ratio	Switch setting 1	2	3	4	5	Ratio	Switch setting 1	2	3	4	5
1:1						1:17					ON
1:2	ON					1:18	ON				ON
1:3		ON				1:19		ON			ON
1:4	ON	ON				1:20	ON	ON			ON
1:5			ON			1:21			ON		ON
1:6	ON		ON			1:22	ON		ON		ON
1:7		ON	ON			1:23		ON	ON		ON
1:8	ON	ON	ON			1:24	ON	ON	ON		ON
1:9				ON		1:25				ON	ON
1:10	ON			ON		1:26	ON			ON	ON
1:11		ON		ON		1:27		ON		ON	ON
1:12	ON	ON		ON		1:28	ON	ON		ON	ON
1:13			ON	ON		1:29			ON	ON	ON
1:14	ON		ON	ON		1:30	ON		ON	ON	ON
1:15		ON	ON	ON		1:31		ON	ON	ON	ON
1:16	ON	ON	ON	ON		1:32	ON	ON	ON	ON	ON

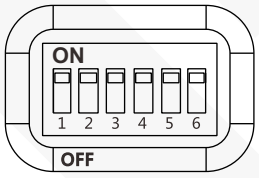

Note:
1.To set 1 score to 8 tickets (score/ticket 1/8). Set the sixth, The fourth and fifth at ON the other OFF.
2.To set 2 tickets per 8 scores (ticket/secore 1:4) set the third, fourth and fifth at ON other OFF.

H Panel display information (showing on light's color)
Without ticket: red and blue light breathing change mode;
Ticket dispensing : blue light flashing;
Tickets available: blue↔purple↔red cycle gradual change;
Ticket jammed: red and blue lights alternately flashing fast.

Communication circuit

Description of interface circuit and communication relationship of ticket outlet:
1.The output signal circuit of the ticket outlet is triode collector or MOS drain open circuit output mode. When it is used,users are advised to use optocouplers to receive signals when designing the interface circuit (see Figure 1).
2.Game machine is Master device, ticket outlet is Slave device.
3.The relationship of the Master inputing control signal, the Slave outputing signal, and motor status is shown in Figure 3. The workflow is shown in Figure 2.

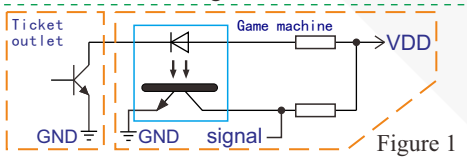

Figure 1

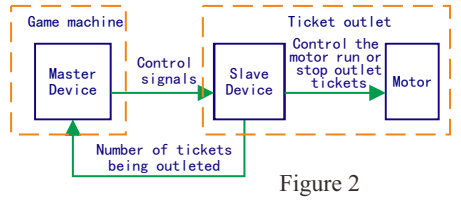

Figure 2

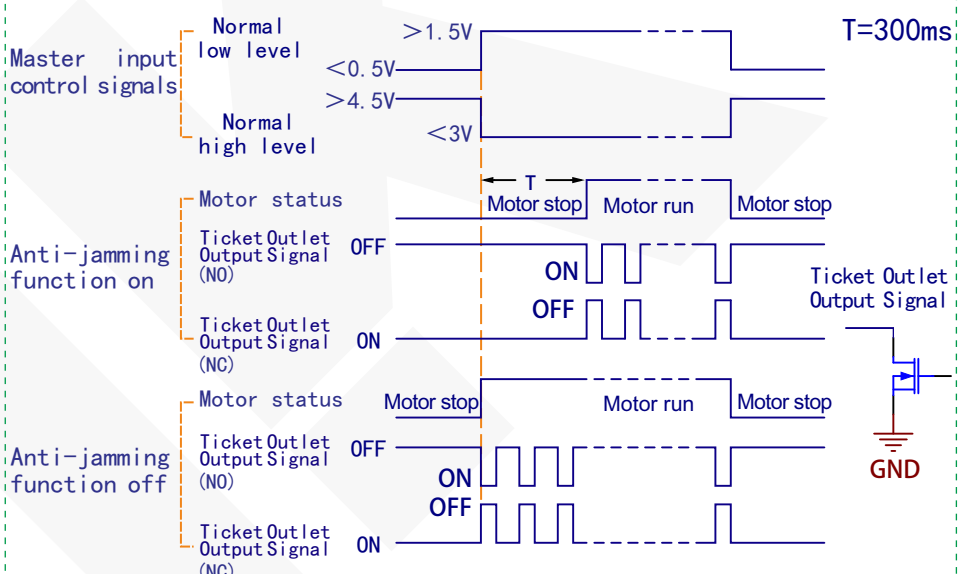

Figure 3

Likang Electronic Technology Co.,Ltd.
www.lk.cm

Assembly dimensions Unit: mm

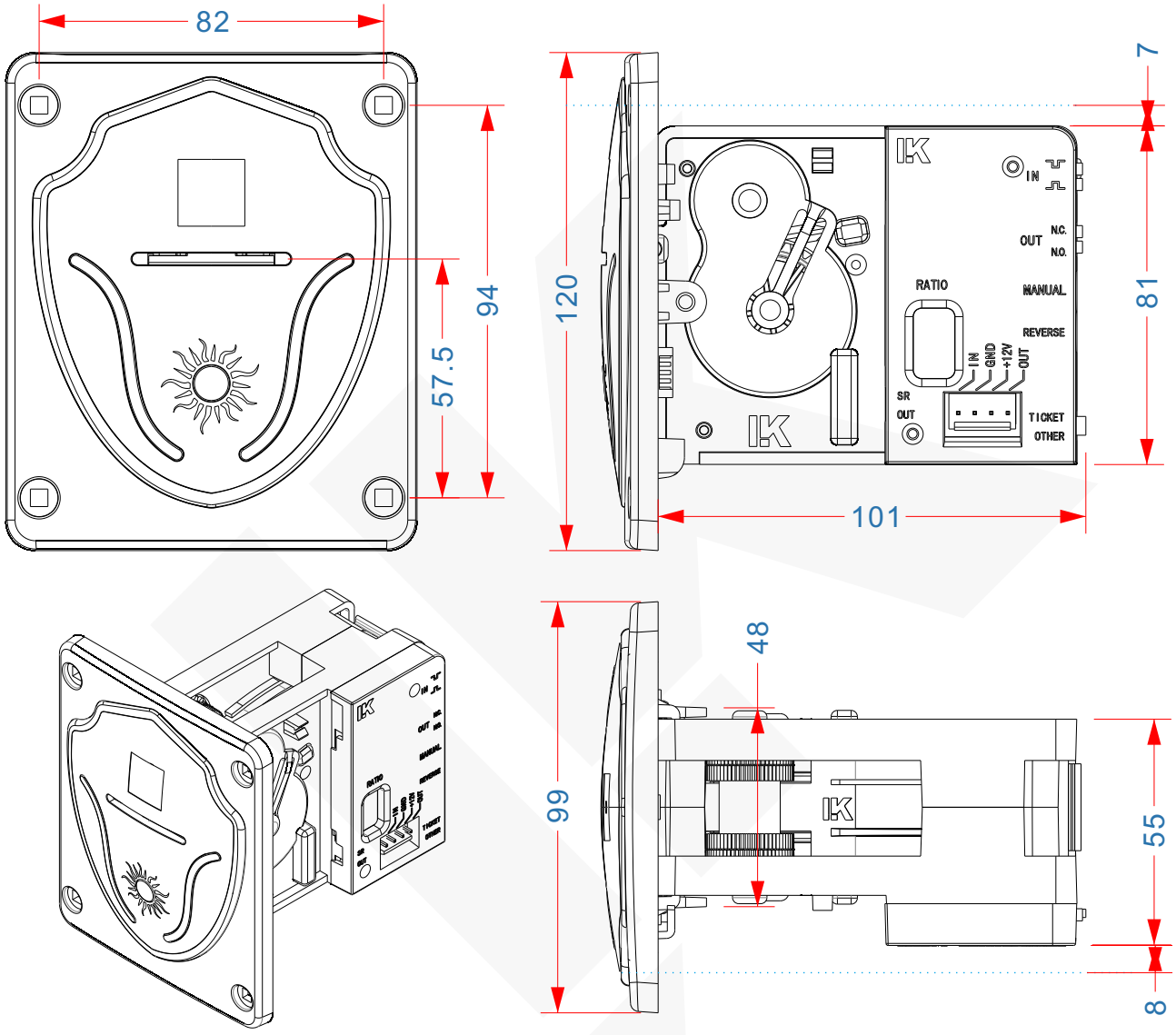

Symptom	Common Exception Handling
The tickets are blocked	Pull out the upper guided board from the ticket machine's back, and clear away the jammings.
NO ticket	1.Check the machine power outlet connect or not,poorly connect or not. 2.Check input level is correct or not. 3.Check whether something is blocked in the ticket channel. 4.Check whether the guide plate is dropped. 5.To the check the plug of motor loose or not. 6.If the panel indicator is flashing, please reload the ticket
Tickets out not matching to the score-ticket ratio	1.Check that the ratio switch is set correctly. 2.Ground connection(Means "GND") between the machine and the ticket outlet Resistance is not 0Ω.
Remain ticket will be automatically outlet after loading	1. Check whether the input level switch is set correctly. 2. If the previous outlet is not completed, the remaining tickets will be automatically finish first after reloading ticket.
Fail to install ticket	1.Check for foreign objects blocking the holes of tickets or not. 2.Check whether the circuit voltage is too low or electric eye is bad. 3.Insert the ticket into the ticket channel and press the forward key to complete manual ticket loading.
No long press on the forward or reverse key	Due to the program is equipped with a protection function, if long press the forward or reverse key for more than 7 seconds, the protection function activates and the motor stops rotating. But it will returns to normal after releasing the key.
Dispensing tickets delay	After adding ticket,if there is still points left on the machine, the ticket will outlet after waiting a few seconds. This design is to facilitate the placement of tickets and close the hatch by staff.
Noise	There is a slight noise occasionally during the operation of the mechanical structure and the noise will down when dispensing ticket. This phenomenon is normal.

Performance parameter

Operating voltage			DC 12V±10%
Operating current			<50mA
load current			≤1.2A
Output mode			OC
Output Signal			30ms，＜650mA
Low level input trigger			High level requirement:＞4.5V
			Low level requirement:＜3V
High level input trigger			High level requirement:＞1.5V
			Low level requirement:＜0.5V
Speed of tickets			300mm/s
Individual packaging	Meas		128*104*130mm
	Gross weight	Without wire	401g
		With wire	420g
Carton packaging	Package		20PCS/SET
	Meas		530*265*280mm
	Gross weight	Without wire	8.65KG
		With wire	9.04KG

If product technology improved, it will be edited in the new manual without notice. The ultimate interpretation of this manual is up to Guangzhou Likang Electronic Technology Co.,Ltd.

Likang Electronic Technology Co.,Ltd.
www.lkchina.asia